RADIONODE®

Multifunctional Temp Data Logger

RN400-T2EX User Manual

2021 | Rev. 1.03

Keep this document nearby so that it may be referred to when needed.

CONTENTS

About this Manual 04

Intellectual Property Rights 04

Notational Conventions 04

Introduction 05

Key Features 05

Exterior 06

Accessories 07

Specifications 08

Installation 09

Terminal Block 10

Data Logger Installation 11

Connecting Terminal Block 13

Operation 17

Viewing Channel Information 18

Viewing Device Information 19

Resetting Data Logger 20

Memory Card for Data Logging 21

Configuration 22

Device Information 24

Server 25

Measurement 26

Wi-Fi Network 28

Display 31

Commands 31

Memory Card Usage Configuration 32

Checking Communication With Radionode365 Server 33

Radionode365 34

Adding Devices from Your Smartphone 35

Adding Devices from Your Computer 38

Maintenance 41

Cleaning 41

Batteries 41

Firmware Update 42

Customer Service Information 43

Manufacturer Contact Information 43

Warranty 43

Limit of Liability 43

Certifications 44

HTTP Radionode Protocol V2 45

Check-in 45

Data-in 48

Order List 49

Data Logger 49

Accessories 49

About this Manual

This document contains instructions for usage and installation of the RADIONODE® RN400-T2EX. Product specifications and certain features herein may be subject to change without prior notice. Figures used in this manual are for explanatory purposes only, and may differ from your system depending on installation conditions. Software screenshots may change after software updates.

Intellectual Property Rights

© 2021 DEKIST Co., Ltd.

All contents and figures herein are property of DEKIST Co., Ltd. Reproduction or redistribution of all or part of this document in any way is not permitted without prior consent from DEKIST.

Notational Conventions

Failure to follow instructions marked with "Warning" may result in slight injury to the user.

Failure to follow instructions marked with "Caution" may result in equipment damage or malfunction.

Additional helpful information is marked with "Note".

Introduction

The RADIONODE RN400-T2EX Data Logger periodically measures temperature and RH, then sends measurement data to the Radionode365 server. The RN400-T2EX has a total of 4 I/O channels.

Channel 1	External temp sensor	**Channel 2**	External temp sensor
Channel 3	Door Contact	**Channel 4**	Alarm relay

Key Features

Key features of the RN400-T2EX include:

- Data Logger can be used with additional temp sensors.
- Use Wi-Fi connection to easily configure your Data Logger.
- Built-in buzzer that activates alarm relay when measurement is outside the margin of error.
- Measurement data can be viewed remotely from Radionode365 website. See Radionode365 on page 34.
- Measurement data can be logged on a micro SD card.

Exterior

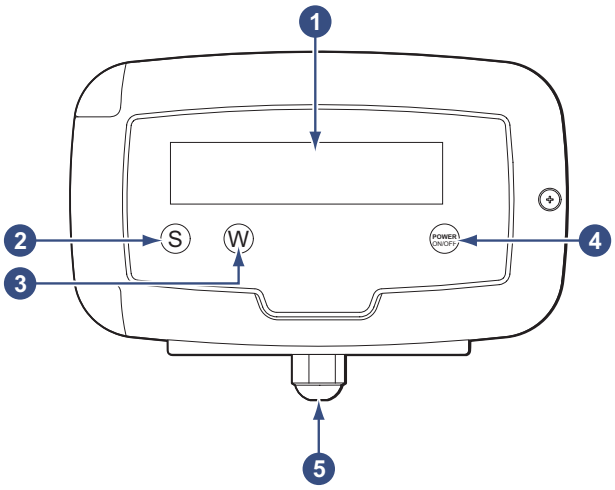

1 Display
2 Menu button
3 Display button
4 Power button
5 Cable gland

Power cables and cables of other devices, such as external sensors, are connected via cable glands to the internal terminal block.

For instructions on how to use the buttons, see Operation on page 17.

Accessories

All accessories, except for cable glands, are sold separately.

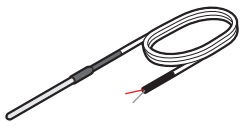

PT100 Temp Sensor

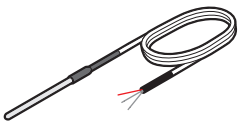

TC-K Temp Sensor

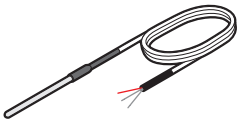

TC-T Temp Sensor

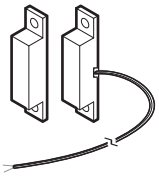

Door Contact

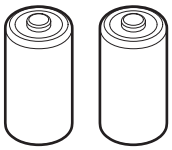

1.5 V Battery × 2

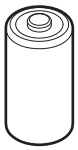

3.6 V Battery

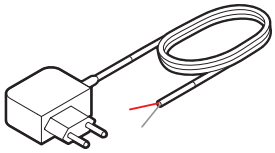

DC Adapter (12 V, 500 mA)

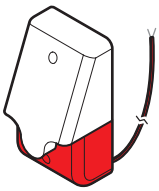

Alarm Beacon

Cable Gland

Use the same type of external temperature sensor for one device. Type K Thermocouple (TC-K) and PT100 Sensor cannot be used together.

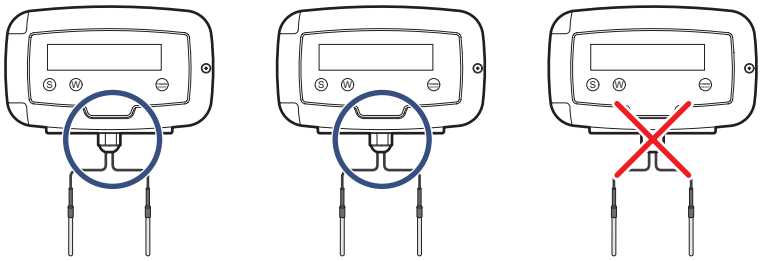

In the event of power failure, two C-type 1.5 V batteries or one 3.6 V battery must be placed in the Data Logger. RADIONODE Data Logger is designed to not operate without a battery, even when external power is connected.

> ⚠ Only use Energizer® batteries. The Data Logger's power consumption varies significantly depending on operation functions. Only Energizer batteries can keep performance stable despite extreme battery usage fluctuations.

Specifications

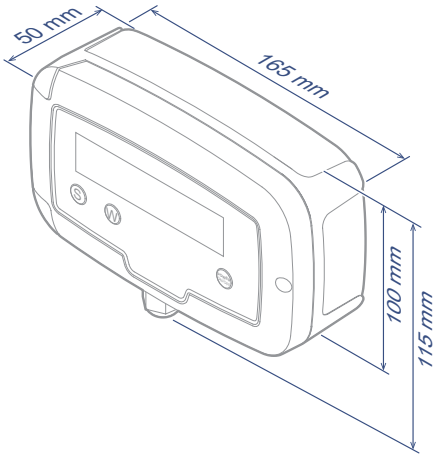

RN400-T2EX Data Logger

PT100 Temp Sensor (Ch. 1 or Ch. 2)	-200 ~ 300 °C (accuracy: ±0.5 °C)
TC-K Temp Sensor (Ch. 1 or Ch. 2)	-30 ~ 300 °C (accuracy: ±0.5 °C)
TC-T Temp Sensor (Ch. 1 or Ch. 2)	-100 ~ 50 °C (accuracy: ±0.5 °C)
Door Contact (Ch 3.)	CLOSE = 0, OPEN = 99 (Normal Close)
Alarm Relay (Ch 4.)	DC 40V, 1A
Wi-Fi	2.4 GHz IEEE 802.11 b/g/n, WPA2-Enterprise
Cable Gland	PG-9
Water Resistance Rating	IP65 (IP67 is optional)
External DC power	5 ~ 30 V (Built in UPS)
Size	165 × 50 × 115mm
Operating conditions	-20 ~ 60 °C, 0 ~ 95% RH (non-condensed)

Optional acc. PT100 Temp Sensor

M. Range	-200 ~ 200 °C
Cable	3 m or 15 m
Size	60 mm, ø4.8

Optional acc. TC-K Temp Sensor

M. Range	-50 ~ 200 °C
Cable	3 m or 15 m
Size	55 mm, ø3.0

Optional acc. TC-T Temp Sensor

M. Range	-200 ~ 200 °C
Cable	3 m or 15 m
Size	55 mm, ø3.0

Note that the performance of the external temperature sensor separately may differ from when it is connected to the Data Logger.

Installation

The following procedure will guide from the installation procedure to the Radionode365 registration process.

1. Install sensors or connect other devices to the Data Logger as needed.
2. Connect power and insert the battery.
3. Use the virtual Wi-Fi router feature to configure the Data Logger. See Configuration on page 22.
4. Now that the Data Logger has been installed, it must be registered to Radionode365. See Radionode365 on page 34.

Depending on your installation circumstances and conditions, your installation process may vary. For example, if you are installing multiple Data Loggers, you might find it easier to:

1. Insert batteries into all Data Loggers before running.
2. Configure one Data Logger first.
3. Use a micro SD card to set up additional Data Loggers. For this method, see Memory Card Usage Configuration on page 32.
4. Register the Data Loggers onto Radionode365.
5. Finally, install the Data Loggers.

Terminal Block

Terminal Blocks can be found inside of a Data Logger, with other components arranged as follows:

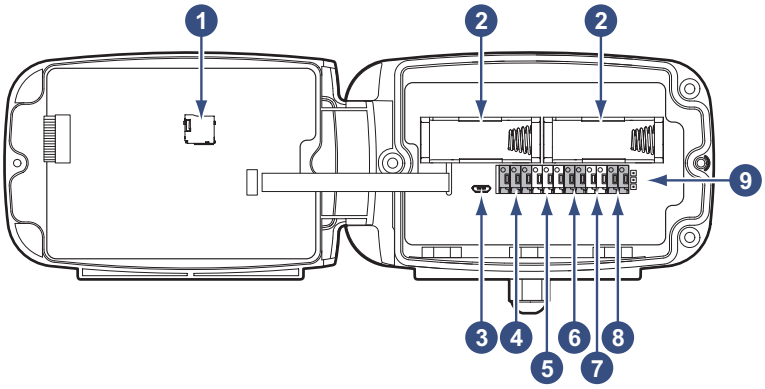

1. Micro SD Card Slot
2. Battery Holder
3. Micro USB Port
4. Temp Sensor Terminal (Ch. 1)
5. Temp Sensor Terminal (Ch. 2)
6. Door Contact Terminal (Ch. 3)
7. Alarm Relay Terminal (Ch. 4)
8. Power Outlet
9. Battery Jumper

Micro SD card is used to log measurement data. See Memory Card for Data Logging on page 21.

The micro USB port is used for sensor calibration. As RN400 Series sensors are shipped after calibration, no further calibration is required. However, if the sensor malfunctions, contact DEKIST for inspection.

For more information on the terminal block, see Connecting Terminal Block on page 13.

Data Logger Installation

The general procedure for installing a Data Logger is as follows:

1. Loosen the screw on the right side of the front panel and open the front panel.

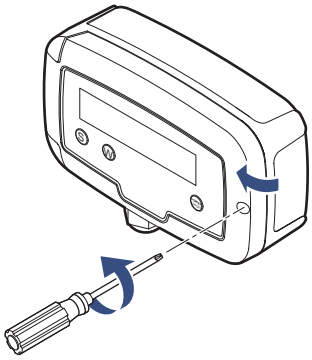

2. Loosen the cable gland.

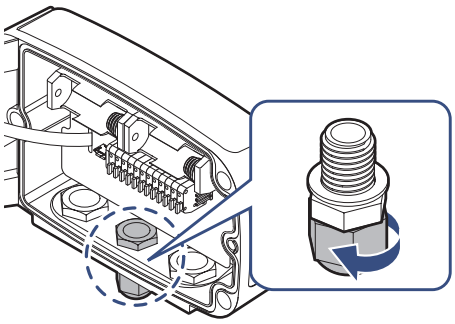

3. Route the cables of the device that will be connected through the gland and connect to the terminal block. Then, connect external DC power and insert the battery. For more information on terminal block connection, see Connecting Terminal Block on page 13.

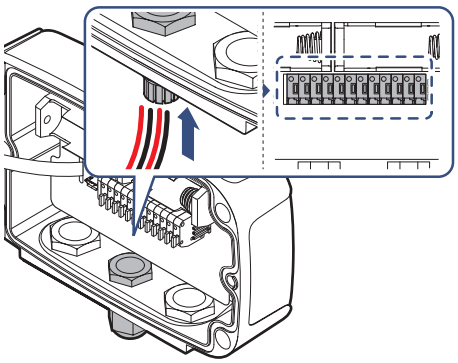

4. Tighten the gland firmly.

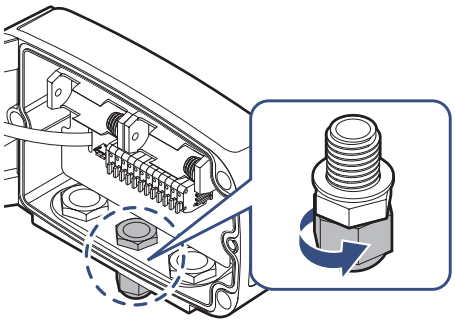

5. Cover the front panel and tighten the screws.

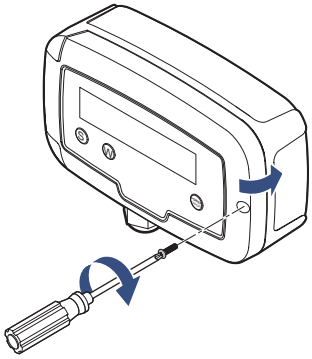

6. There Data Logger is equipped with a magnet at the rear. Place the Data Logger on a steel panel.

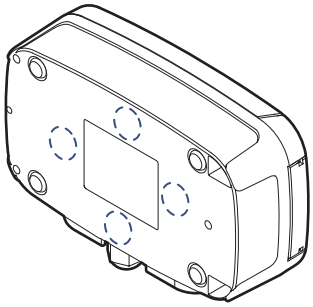

If necessary, use screws to secure. There are three screw holes on the back of the device.

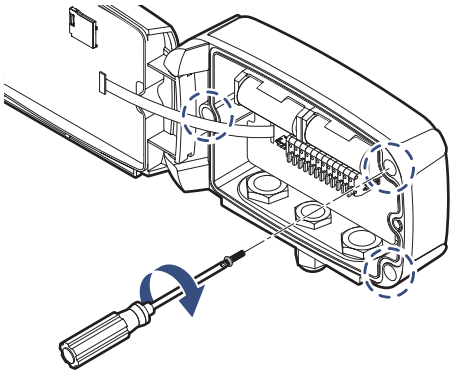

Connecting Terminal Block

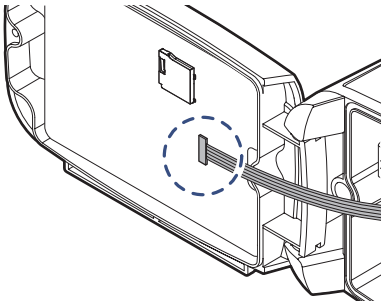

When connecting cables to the terminal block, ensure that the flat cable does not get disconnected from the front connector.

Cable Gland

If Data Logger cable gland cannot sufficiently receive all cables, install additional cable glands. There are two more gland slots at the bottom of the Data Logger.

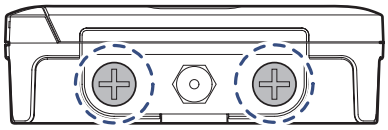

1. Loosen and remove the cap bolt from the left or right gland slot.

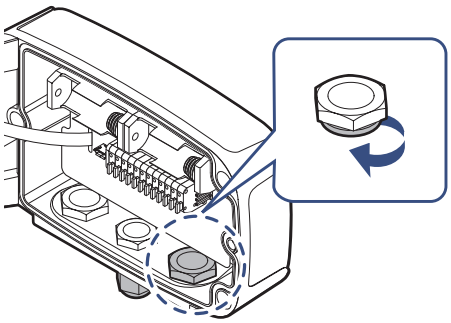

2. Insert the cable gland into the nut and tighten.

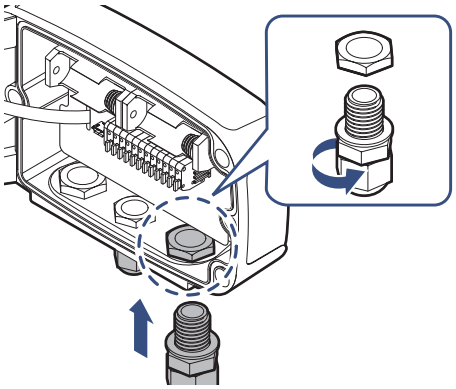

PT100 Temp Sensor

Connect the PT100 cable to **TEMP. CH1** or **TEMP. CH2** terminal. Connect the red cable to the **A(+)** terminal, and the remaining cables to the **B(-)** and **b** terminals.

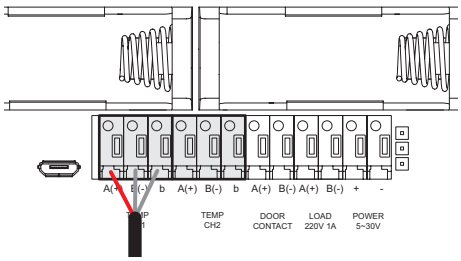

Install the external temperature sensor away from the wall and the floor. The sensor may not touch anything other than the ambient air.

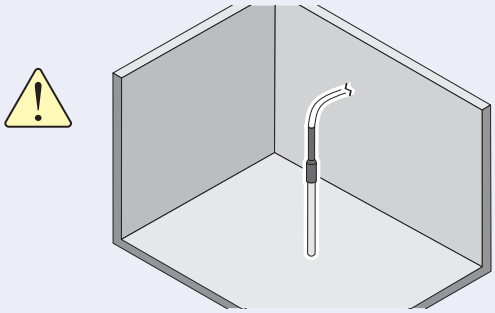

TC-K Temp Sensor

Connect TC-K cable to **TEMP. CH1** or **TEMP. CH2** terminal. Connect the red cable to the **A(+)** terminal, and the remaining cables to the **B(-)** terminal.

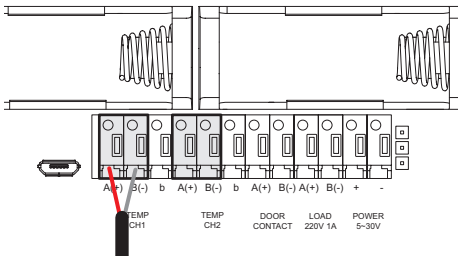

TC-T Temp Sensor

Connect TC-T cable to **TEMP. CH1** or **TEMP. CH2** terminal. Connect the red cable to the **A(+)** terminal, and the remaining cables to the **B(-)** terminal.

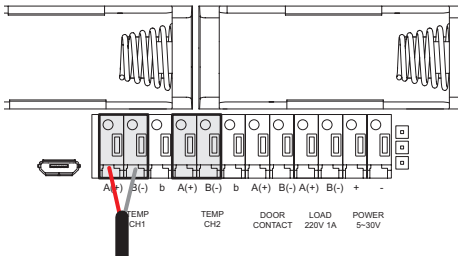

Door Contact

Connect the Door Contact cable to the **DOOR CONTACT** terminal. The door contact cable has no polarity. Connect the cable from one side to the **A(+)** terminal, and the remaining cables to the **B(-)** terminal.

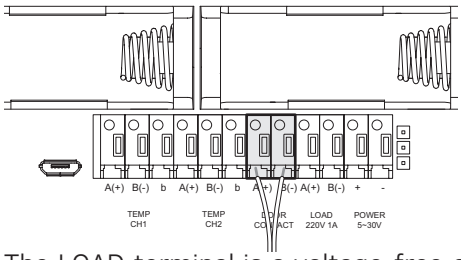

Alarm Beacon

The LOAD terminal is a voltage-free contact relay that allows a load of 1 A at a maximum of DC 40 V.

Connect the alarm beacon cable to the **LOAD** terminal and the **POWER** outlet for power supply. Connect the red cable to the **POWER +** terminal, and the remaining cables to the **LOAD A(+)** terminal. Finally, wire the **LOAD B(-)** and **POWER -** terminals together.

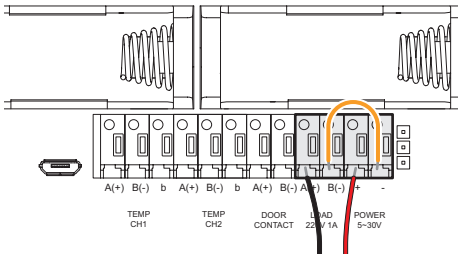

- If no external DC power is supplied, the alarm beacon will not function.
- Do not connect any motor-equipped devices, such as fans, to the **LOAD** terminal. Induced currents from such devices may damage the Data Logger.

DC Power

Connect the Power cable to the **POWER** terminal. Connect the red cable to the **+** terminal, and the remaining cables to the **-** terminal.

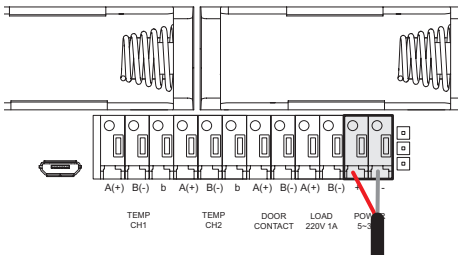

Batteries

Insert two C-type 1.5 V batteries into the battery holder, or one 3.6 V battery into the left-hand battery holder.

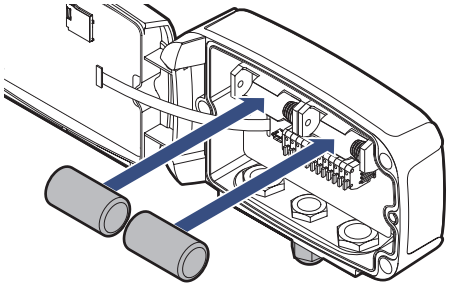

Be careful not to connect batteries with opposite polarities. Doing so may damage the device.

If you are using a 3.6 V battery, move the **BAT** jumper to the **B** position.

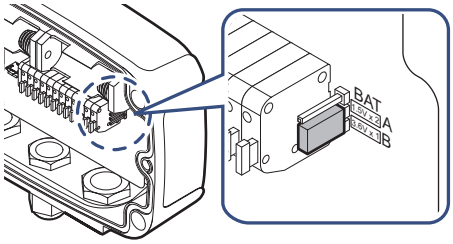

Operation

When the data logger is turned on, the model number and other key information is displayed with the corresponding measurements. If no external power is supplied, the display will turn off shortly and the Data Logger will enter sleep mode.

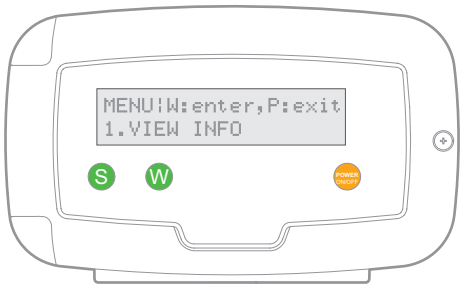

- **Viewing Channel Information**: To view channel information, including measurements on sleep mode, press the W button. Press the W button repeatedly to display different status information.
- **Selecting a Menu**: Press the W button, then press the S button. Press the S button repeatedly to display different menu items. Press the W button to open the displayed menu. Press the P button to exit the menu.
- **Turning Data Logger Off**: Press the W button and hold the P button until `PRESS 'P' ONE MORE TO POWER IT OFF` appears. Hold the P button again.
- **Turning Data Logger On**: Press the P button.

Viewing Channel Information

Press the W button repeatedly to display the below channel data. A sensor channel that is not connected will appear as (none).

LAST SENSING ¦S:menu 1: 26.2C ¦2: 21.6%	Measurements of Channels 1 and 2
LAST SENSING ¦S:menu DOOR:close ¦RELAY:off	Door contact and alarm relay status
LAST TRANSMIT¦S:menu 5 Min Ago, 9 smpl	Elapsed time since last transfer of measurement data to the server & number of datasets to transfer in the next cycle
WIFI SSID dB¦S:menu xxxxxxxx, -50dB	Wi-Fi network name and signal strength
LOCAL TIME ¦S:menu 2020-11-30 17:00	Current date and time
BATTERY STAT.¦S:menu OK. ¦1.5Vx2¦2.88V	Type of battery inserted and current voltage. If the voltage is low, LOW will be displayed.
DATA FILTER.¦S:menu SLOW LEVEL(1-15):1	You can select the level of the digital filter. The higher the number, the less sensitive the sensor reacts (1 level: highest sensitive, 15 level: lowest sensitive). You can choose from the settings menu.
GS CELL TEMP.¦S:menu CELL Temp: 22 C	[ONLY RN400-T2GS] Displays the temperature value of the chemical cell inside the product.

Viewing Device Information

To view device information, select `1.VIEW INFO`. To view the next item, press the Ⓢ button. To exit, press the Ⓟ button.

```
INFO|S:next, P:exit
1.HOLDING DATA: 4
```

Number of datasets to send to the server in the next cycle.

(number of datasets to send = Transfer Interval ÷ Measurement Interval)

When measurement interval is set to 5 minutes and the transfer interval set to 20 minutes, 4 datasets are saved until the next transfer. If data transfer fails, datasets accumulate until successful.

```
INFO|S:next, P:exit
2.POWER: External DC
```

If no external power is connected or power failure occurs, `Bat` will appear.

```
INFO|S:next, P:exit
3.SENSING: 1 Min
```

Measurement interval

```
INFO|S:next, P:exit
4.SENDING: 5 Min
```

Measurement data transmission to server interval

```
INFO|S:next, P:exit
5.UPDATE: 1 Min Ago
```

Time elapsed since last transmission of measurement data to server

```
INFO|S:next, P:exit
6.ID: xxxxxxxx
```

Radionode365 account ID

```
INFO|S:next, P:exit
7.IP:192.168.10.13
```

Data Logger IP Address

```
INFO|S:next, P:exit
8.GW:192.168.1.1
```

Gateway IP address

INFO¦S:next, P:exit 9.DN:210.220.163.82	DNS server IP address
INFO¦S:next, P:exit 10.MAC:508CB16FA1B3	Data Logger MAC address
INFO¦S:next, P:exit 11.SW BUILD:20200720	Firmware version
INFO¦S:next, P:exit 12.MODEL:RN400T2EX	Model No.
INFO¦S:next, P:exit 13.ALARM:OFF (BAT.)	Alarm relay status
INFO¦S:next, P:exit 14.EX-SENSOR: TC-K	Type of external sensor installed

Resetting Data Logger

All setting options (except for Wi-Fi network) can be reset. Select 4.FACTORY DEFAULT.

Memory Card for Data Logging

If a memory card is installed in the Data Logger, measurement data will be written to the memory card as a CSV file as follows:

Measurement date, timestamp, Mac address, value for Channel 1, ... , value for Channel 4

	A	B	C	D	E	F	G
1	CALENDAR(GMT 9)	TIMESTAMP	MACADDR	CH1	CH2	CH3	CH4
2	2020-11-18T09:30:49Z	1605659449	508CB16FA1B3	25.36	48.93	0	0
3	2020-11-18T09:31:49Z	1605659509	508CB16FA1B3	25.38	48.9	0	0
4	2020-11-18T09:32:49Z	1605659569	508CB16FA1B3	25.39	48.89	0	0
5	2020-11-18T09:33:49Z	1605659629	508CB16FA1B3	25.36	48.93	0	0
6	2020-11-18T09:34:49Z	1605659689	508CB16FA1B3	25.39	49.11	0	0

In the temp channel (Ch. 1 or Ch. 2), "n/a" means no external temp sensor is connected. In the door channel (Ch. 3), "0" means the door contact is not connected or “closed.” Similarly, in the alarm channel (Ch. 4), "0" means the alarm beacon is not connected or "normal."

Open the front of the Data Logger and insert a micro SD card into the card slot inside the front panel.

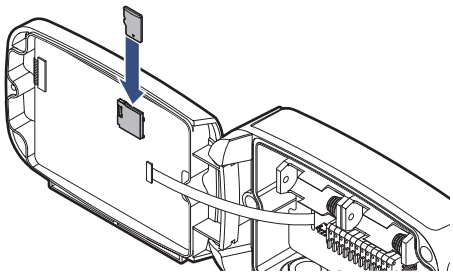

Use an SD card (up to 16 GB) formatted with the FAT32 file system. Other file systems are not supported.

Configuration

The Data Logger is equipped with a virtual Wi-Fi router. The virtual router allows your smartphone or tablet to be linked to Data Logger for configuration.

1. `Select 2.CONFIG MODE(AP)` to enable the virtual router. The following will appear in the display:

```
SOFTAP: _RN400-A1B3
ACCESS: 192.168.1.1
```

2. On your smartphone, find the Wi-Fi network with the same name as shown on the display and connect to the network.

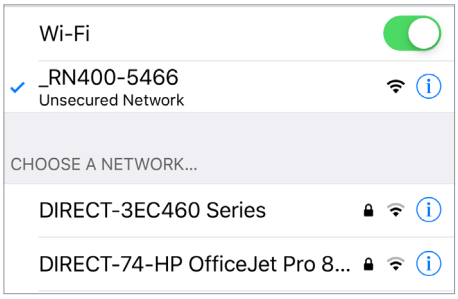

Depending on the version of your Android phone, user identification may be required, as Data Logger is not connected to the Internet.

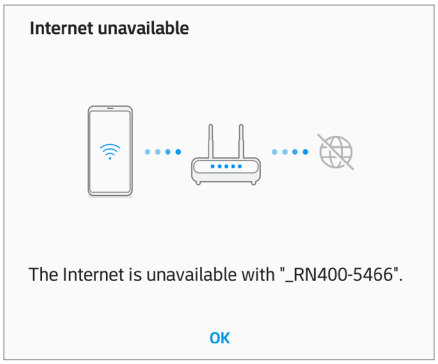

Multiple mobile devices cannot be connected to the Data Logger at the same time.

3. Open your smartphone's web browser and type `"192.168.1.1"` in the address bar. The Settings page wiill appear.

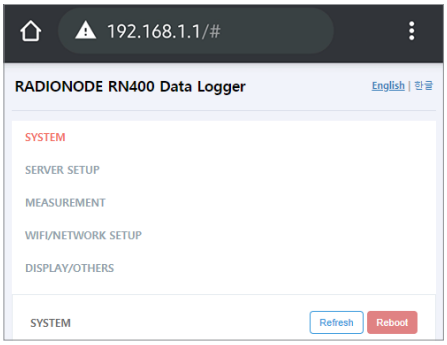

4. Change the settings on each page, then tap **Save**.

5. To finish configuration, tap **Reboot**.

Device Information

Tap **SYSTEM** to view Data Logger device information.

Radionode365 Owner	Radionode365 account ID
Mac ADDRESS	Data Logger MAC address
Model Name	Data Logger model number
Firmware version	Firmware version
OTA Release Version	OTA Release Version
SDCARD Inserted	If a memory card is not inserted, **No SDCard** will appear.
WIFI SSID	The Wi-Fi network used by the Data Logger
IP Address	Data Logger IP Address
Gateway Address	The gateway IP address to which the Data Logger is connected
DNS	DNS server IP address

Server

Tap **SERVER SETUP** to configure server receipt of measurement data.

Destination	▪ Select **Radionode365** to send measurement data to the Radionode365 server. ▪ Select **User HTTP Server** to send to a customer or third-party server, and configure the below items accordingly. ▪ Select **SDCard Logger** to operate Data Logger independently without a server.
Host	Server IP address
Port	Server port number
Checkin URL	URL of the server program that processes check-in requests
Datain URL	URL of the server program that processes data-in requests.

For check-in and data-in request formats, see HTTP Radionode Protocol V2 on page 45.

This item will appear if **Destination** is set to **SDCard Logger**.

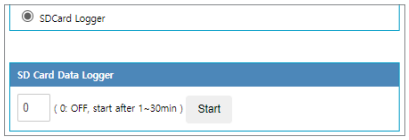

SD Card Data Logger	If set to "0", measurement data will begin to be written to the memory card as soon as booting completes. If set to "10", data will be written 10 minutes after booting completes. For more information, see Memory Card for Data Logging on page 21.

Measurement

Tap **MEASUREMENT** to configure sensor operation.

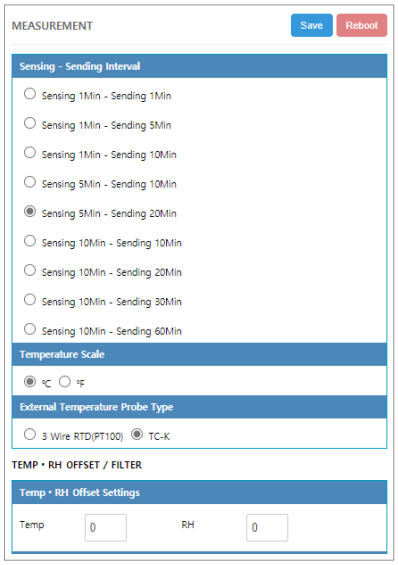

Sensing - Sending Interval	Select the interval between sensor measurement and data transmission. For instance, if **Sensing 1Min - Sending 5Min** is selected, sensor measures every 1 minute, and measurement data is sent to the server every 5 minutes, or written on a memory card.
Temperature Scale	Select the unit of measurement to use when measuring temperature.
External Temperature Probe Type	Select the type of external temperature sensor installed.
Temp	Enter the calibration value to add to the temperature.
RH	Enter the calibration value to add to the RH.

On the **SERVER SETUP** page, set the **Destination** to **User HTTP Server** to add seconds to the list of selectable options.

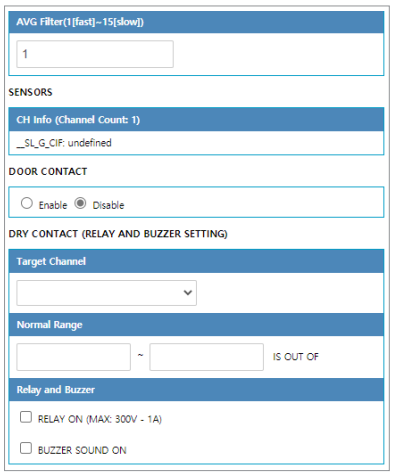

AVG Filter	Adjusts the sensor sensitivity. The margin of error ranges from 1 to 15, and the higher the value, the lower the sensitivity.
CH info	Displays a list of I/O channels.
Door Contact	Select **Enable** to sound an alarm when a door is opened.
Target Channel	Select the input channel that will trigger the alarm relay and specify the normal range. For example, if you select **CH1 (Temp)** and the normal range is set to "20 - 25", the alarm relay will turn on when the temperature measured by Channel 1's temp sensor is lower than 20 degrees or higher than 25 degrees.
Relay & Buzzer	Select **RELAY ON** to enable the alarm relay. **When BUZZER SOUND ON** is selected, the built-in buzzer will sound when an alarm goes off.

The value of the door contact is 99 when open and 0 when closed. Set the normal range to "0 - 98" to allow the alarm relay to turn on when the door contact is open.

Wi-Fi Network

Tap **WIFI/NETWORK SETUP** to configure the Wi-Fi network that will be used by the Data Logger.

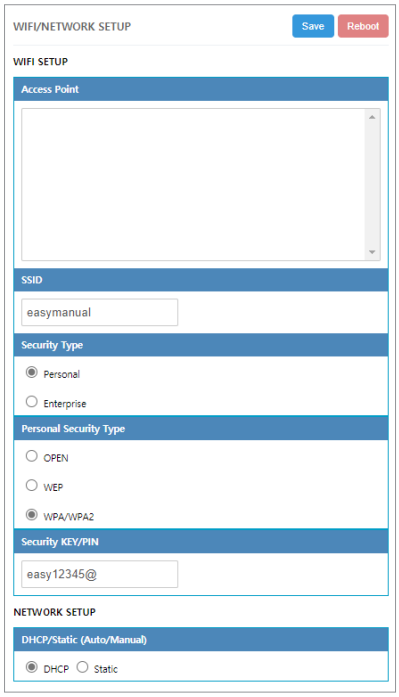

Access Point	Select a network to use from the list of searched Wi-Fi networks. The closer the signal strength is to 0 dBM, the stronger the connection. If possible, use a Wi-Fi network with a signal strength of -70 dBm or higher.
SSID	The selected SSD will appear.
Security Type	Select the type of security that your Wi-Fi network uses.
Personal Security Type	If **Security Type** is set to **Personal**, select the current security type.
Security KEY/PIN	Enter your Wi-Fi password.
DHCP/Static (Auto/Manual)	If **DHCP** is selected, the router will randomly assign an IP Address. If a static IP address is needed, select **Static** and configure additional settings.

If a static IP address is needed, select **Static** and configure additional settings as follows:

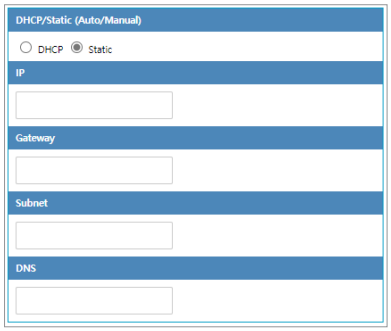

IP	Data Logger IP Address
Gateway	Gateway IP address
Subnet	Subnet mask
DNS	DNS server IP address

Enterprise Security (WPA Enterprise)

When connecting to a Wi-Fi network that uses enterprise security, the certificate is passed from Data Logger to the RADIUS server along with the RADIUS server account. Once user's access is authorized by the RADIUS server, access to the network is granted.

To connect to a network that uses enterprise security, adhere to the following procedure:

1. Copy the RADIUS server certificate to a micro SD card with the following path and filename:

```
/cert/ca.pem
```

> Ask your network administrator for a certificate in a PEM format. Certificates in other formats are not supported.

2. On the **WIFI/NETWORK SETUP** page, set the **Security Type** option to **Enterprise** and configure the following additional settings:

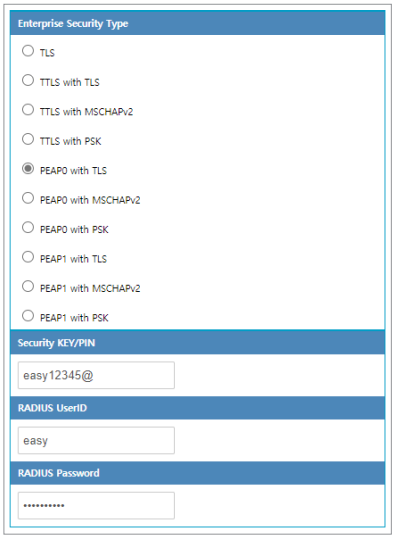

Personal Security Type	Security type
RADIUS UserID	RADIUS server account ID
RADIUS Password	RADIUS ID password

Display

Tap **DISPLAY/OTHERS** to configure display and other options.

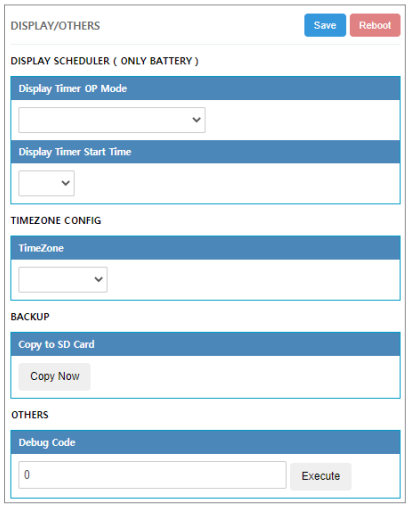

Display Timer OP Mode	This setting can be configured with other settings to set the display operation interval during sleep mode. Select how long the display will stay on in minutes. Select **Always** to disable sleep mode.
Display Timer Start Time	Select what time the display will turn on.
Timezone	Select which timezone to use.
Copy Now	See Memory Card Usage Configuration on page 32.
Debug Code	Enter a command to perform a specific function. See the following section for a detailed explanation.

Commands

On the **DISPLAY/OTHERS** page, the following commands can be entered in **Debug Code**. Enter a command in uppercase, then tap **Execute**.

`ATVMAC xxxx0000xxxx`	Enter the address that will be used as the virtual MAC address.
`ATCLF`	The virtual MAC address is replaced by the original address.
`ATNODNS 1`	DNS settings are ignored.
`ATNODNS 0`	DNS settings become valid again.
`ATLOG 1`	Event logs are saved on the memory card.
`ATLOG 0`	No event logs are created.

Memory Card Usage Configuration

Memory cards facilitate the configuration of multiple Data Loggers at once.

1. Back up the setup data on a memory card in the configured Data Logger.

a) Insert a micro SD card into the Data Logger.

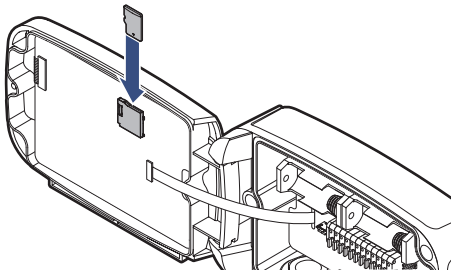

b) On the **DISPLAY/OTHERS** page, tap **Copy to SD Card** > **Copy Now**.

c) Remove the SD card.

2. Copy the setup data from the SD card to another Data Logger.

a) Insert the SD card into the Data Logger.

b) Use the P button to turn the Data Logger off.

c) Press both the S and W buttons simultaneously and hold the P button to turn the Data Logger on.

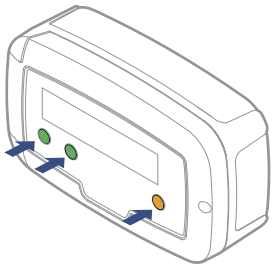

If `NEW CONFIG FILE IS LOADED` appears, the setup data has been copied successfully.

> ⚠ Use an SD card (up to 16 GB) formatted with the FAT32 file system. Other file systems are not supported.

Checking Communication With Radionode365 Server

From the Data Logger, select `6.CHECK SYSTEM` to ensure that data are successfully updated when adding I/O channels in Radionode. Measurements are displayed every 3 seconds and sent to the Radionode365 server. On the web page, verify that the displayed values match the ones shown. Press the Ⓟ button to finish.

Radionode 365

Radionode365 is a cloud-based sensor monitoring web application operated by DEKIST, a radionode manufacturer. We offer data storage for all sensor-measured data, and provide various features such as emergency alarms, reports, and real-time status based on stored data.

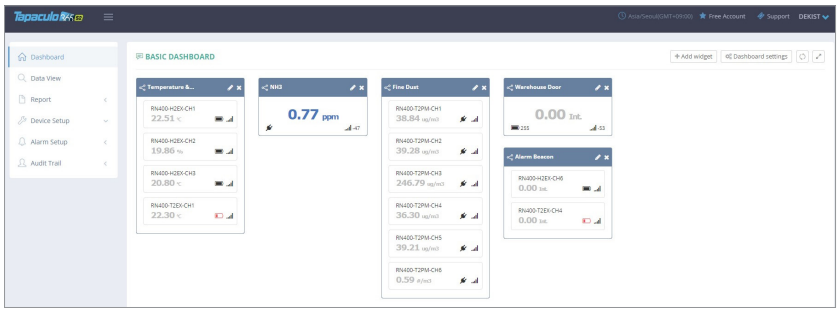

This chapter outlines how to add new devices and channels to Radionode365. For more information on Radionode365, see the information provided on the web page below:

`https://help.radionode365.com/article-categories/tp365-manual`

Key features of Radionode365 include:

- Measurement data displayed in real-time;
- View measurement data records via charts;
- Create and email periodic reports;
- Alarms notifications sent via e-mail, text, or voice message in the event of an alarm.

Create a user account at the address below to access Radionode365.

`https://s2.Radionode365.com/html/memberjoin.html`

Adding Devices from Your Smartphone

At the **New Device** page, you will find a unique QR code for your account. The QR code allows you to easily add devices and channels to your smartphone.

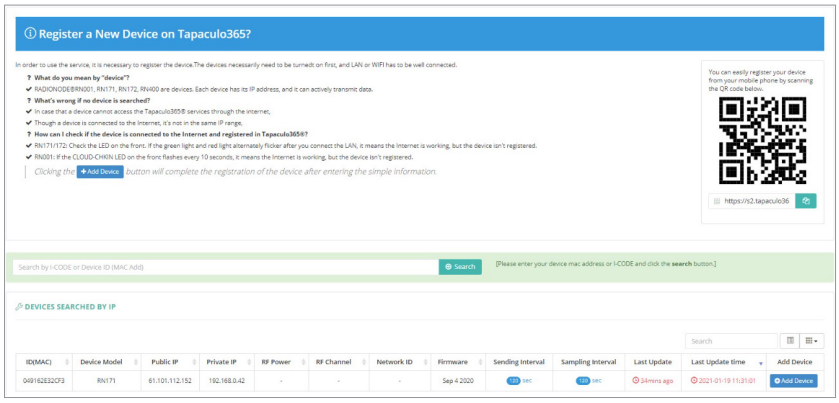

Scan the QR code with your smartphone. Alternatively, copy the link address from the QR code image and send it to your smartphone.

1. Your smartphone's default web browser will open with your user information. Tap **Add Device**.

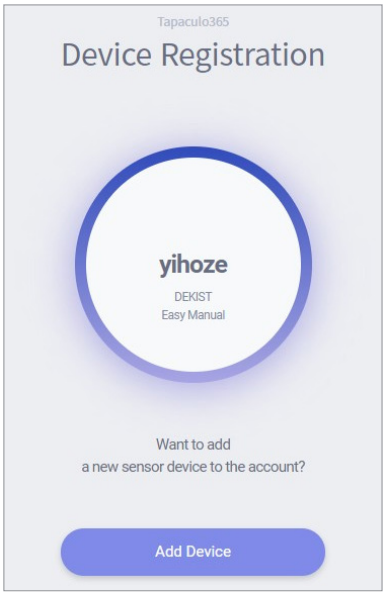

When the RN400 Series Data Logger first connects to Radionode365, its identification code (i-code) is displayed as follows:

```
Enter iCode on TP365
iCode: 2024
```

2. Enter the i-code on the device display. If you do not see an i-code on the display, tap **Search by MAC address** and enter your MAC address.

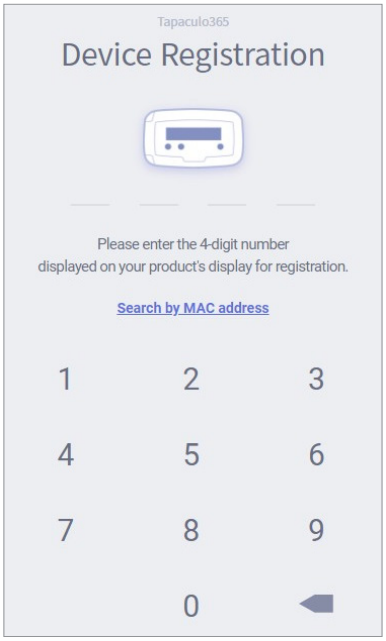

3. If the i-code or MAC address is correct, the device information will appear as below. Tap **Next**.

4. Enter your device name, check the box of the channel that will be used, then enter the channel name and unit that will be used. Tap **Next** to finish.

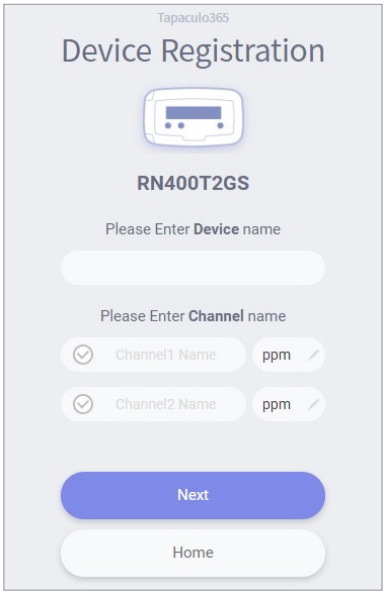

Adding Devices from Your Computer

Adding Devices

The **New Device** page will appear if there is no added device on login. To add a device that was added later, click **Device Setup** > **New Device**.

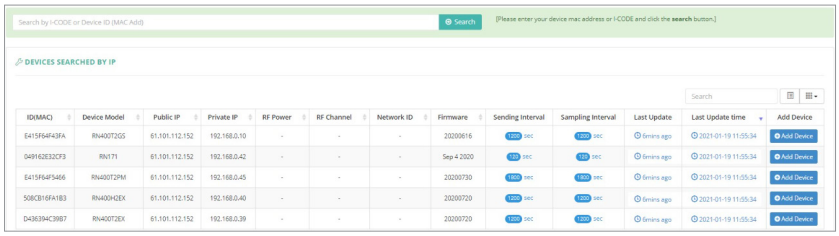

Devices found in the same IP band are listed here. If you do not see your device in the list, you can add it using its i-code. When RN400 Series first connects to Radionode365, its i-code is displayed as follows:

```
Enter iCode on TP365
iCode: 2024
```

Enter the i-code above the device list and click **Search**. Devices can also be searched via MAC address instead of their i-code. The device will be then be added to the list.

To add your device, click the **Add Device** button in the last column.

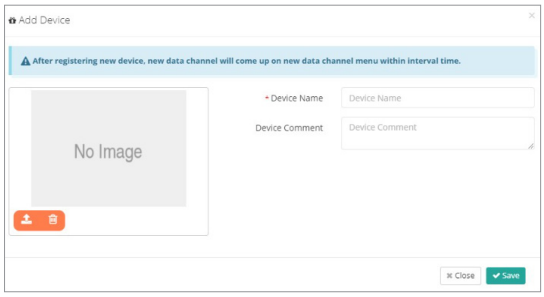

Enter your device name in the window that appears, upload a picture of the installed device, then click **Save**.

Adding Channels

Once your device has been added, click **Device Setup** > **New Data Channel**. All added device channels will be listed.

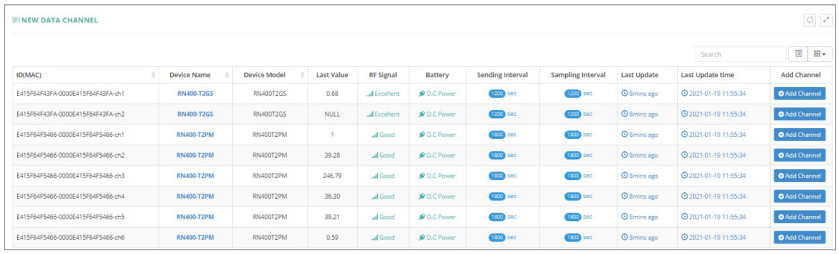

This list also includes channels not associated with external sensors or other devices. Adding a channel essentially means selecting a channel to monitor. To add a channel, click the **Add Channel** button in the last column.

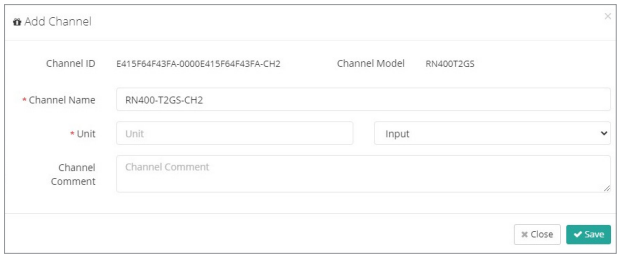

Enter the channel name in the window, select/enter a unit to use, then click **Save**.

To view the list of added channels, click **Device Setup** > **Channel List**.

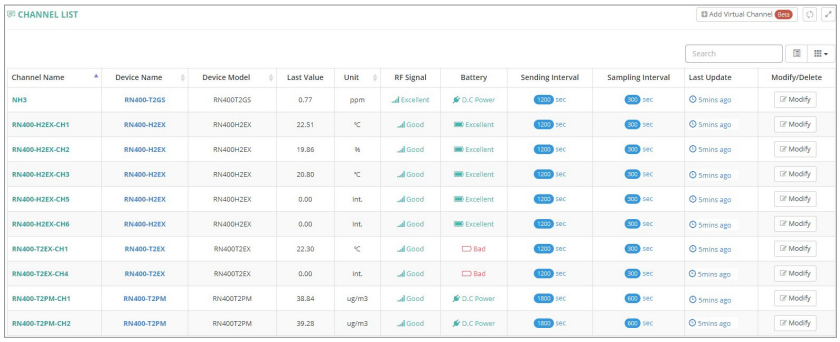

Adding Widgets

A widget contains one or several channels. You can add a widget to the dashboard by clicking **Dashboard**, then **Add widget**.

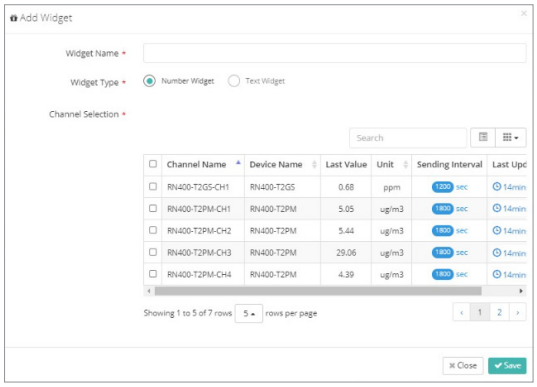

Enter the widget name in the window, select channels, then click **Save**.

Maintenance

Cleaning

Use a dry cloth to clean the Data Logger. Do not use solvents or abrasives. Not only do these substances damage the surface of the Data Logger, but they may also affect sensor performance.

Batteries

Replace the battery when the battery status on the Radionode365 web page is **Bad**, or if it appears as follows:

```
WARNING!  !S:menu
Low Battery!
```

When the measurement interval and transfer interval are set to the lowest frequency, the battery is expected to last up to 1 year without external power.

Firmware Update

The Data Logger can be updated with new firmware to correct errors or enhance features. Latest firmware is distributed optionally depending on your circumstances.

1. Copy the firmware file to a micro SD card to the following path and insert it into Data Logger. The file name is the same as the model number.

```
/img/t2ex.bin
```

2. Insert a micro SD card into the Data Logger.
3. Use the P button to turn the Data Logger off.
4. Press both the S and W buttons simultaneously and hold the P button to turn the Data Logger on.

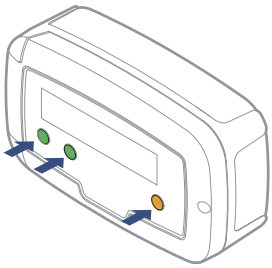

If `NEW IMAGE FILE IS LOADED` appears, the firmware will be updated successfully.

> ⚠ Use an SD card (up to 16 GB) formatted with the FAT32 file system. Other file systems are not supported.

Customer Service Information

Manufacturer Contact Information

DEKIST Co., Ltd. provides repair service and replacement parts for RADIONODE products. To request customer service, contact us via one of the following methods.

- Tel: +(82) 1566-4359
- Fax: (+82) 31-8039-4400
- E-mail: master@dekist.com

Warranty

Repairs are provided free of charge for product failure under normal operating conditions within one year of the product installation date.

Limit of Liability

Warranty repairs are not provided in the event of:

- Failure caused by unapproved installation methods;
- Failure caused by user negligence;
- Failure caused after alteration, disassembly, or repair of the product by a person unauthorized by DEKIST;
- Failure caused by corrosion, falling, submersion, or other improper storage methods;
- Failure caused by natural disaster or other unforeseen circumstances, such as storms, floods, earthquakes, lightning, or abnormal voltage;
- Service requested for actions that the user can take, such as replacing consumables;
- Alteration of the software through decompilation or the like

Certifications

FCC Class A Digital Device

This equipment has been tested and found to comply with the limits for a Class A digital device, pursuant to part 15 of the FCC Rules. These limits are designed to provide reasonable protection against harmful interference when the equipment is operated in a commercial environment. This equipment generates, uses, and can radiate radio frequency energy and, if not installed and used in accordance with the instruction manual, may cause harmful interference to radio communications. Operation of this equipment in a residential area is likely to cause harmful interference in which case the user will be required to correct the interference at his own expense.

Changes or modifications not expressly approved by the manufacturer responsible for compliance could void the user's authority to operate the equipment.

KC

This equipment has passed conformity testing for use in work environments, and is likely to cause interference when used in a household environment.

HTTP Radionode Protocol V2

Radionode users can build their own servers that receive measurement data from radionode devices, such as the RN400 Series data loggers or RN17x Series data transmitters, instead of the Radionode365. This chapter describes the POST-method HTTP request format used by radionode devices for customer server developers.

Customer servers must process the following two requests:

- The radionode device requests transmission of device information from the server at the start of operation and every six hours thereafter. This request is called check-in.
- The device requests transmission of measurement data from the server at the set time. This request is called data-in.

Check-in

Check-in requests are in the following format:

```
POST / HTTP/1.1
Host: 192.168.10.1/checkin
Content-Type: application/x-www-form-urlencoded
Content-Length: 589

mac=0000xxxx0000&
ver=20201031&
model=RN171&
ip=192.168.100.11&
splrate=60&
interval=300&
tags=xxx|xxx|xxx
```

In `192.168.10.1/checkin`, `checkin` is the server program name that processes check-in requests, which can be either `checkin.php`, `checkin.asp` or `checkin.js`.

- `mac`: MAC address of the device
- `ver`: Firmware version
- `model`: Model No.
- `ip`: IP Address
- `splrate`: Measurement interval
- `interval`: Data transfer interval
- `tags`: CH info

  This parameter is separated by vertical lines (|) and indicates the nature of each channel.

  ```
  tags=TEMP|RH|NTC_TEMP|NULL|NULL|NULL
  ```

  In this example, there are a total of six channels with Channel 1 indicating temperature, Channel 2 indicating RH, and Channel 3 indicating the temperature measured by NTC external temperature sensor. The remaining channels are not associated sensors or devices.

The server must reply to a check-in request in the following XML format:

```
<xml>
<root>
<ack>ok</ack>
<timestamp>1501912142</timestamp>
<offset-ch1>0.6</offset-ch1>
<offset-ch2>1.3</offset-ch2>
<sample-mode>3</sample-mode>
</root>
</xml>
```

The first two of the five tags are mandatory, whereas the remaining three tags are options, subject to change according to the server's reply.

- `ack`: Processing outcome (`ok` or `error`)
- `timestamp`: Current time of the server in UNIX timestamp format
- `offset-ch1`: Calibration Value of Channel 1
- `offset-ch2`: Calibration Value of Channel 2
- `sample-mode`: Measurement and Transfer Intervals.

  If this tag's value is "3," the measurement interval changes to 5 minutes and the transfer interval to 20 minutes. See the following table:

	1	2	3	4	5	6	7	8	9	10	11	12	13
Measurement interval	1 m	1 m	5 m	5 m	10 m	10 m	10 m	10 m	20 m	30 m	10 s	10 s	10 s
Transfer Interval	10 m	5 m	20 m	10 m	10 m	30 m	20 m	60 m	40 m	60 m	10 s	30 s	60 s

`sample-mode` Note that when setting a tag to a value greater than 10, setting measurement and transfer intervals in seconds may cause rapid battery depletion.

Data-in

Data-in requests are in the following format:

```
POST / HTTP/1.1
Host: 192.168.10.1/datain
Content-Type: application/x-www-form-urlencoded
Content-Length: 589

mac=0000xxxx0000&
sig=40&
bat=255&
volt=1|3.12&
SMODEL=RN400H2EX&
C000=1505912142|23.22|12.44|122.11|123&
P000=1505911542|23.19|12.40|121.96|123&
P001=1505910942|23.18|12.52|122.04|123&
```

- `mac`: MAC address of the device
- `sig`: Strength of wireless signal
- `bat`: Battery status.

  The value ranges from 0 to 255. The battery must be replaced when the value is "5" or less. "-1" is displayed when DC power is connected.
- `volt`: Battery type and current voltage.

  "0" indicates two 1.5 V batteries are inserted and "1", one 3.6 V.
- `SMODEL`: Model number of the device
- `Cxxx`: Current measurement of each channel.

  This parameter is separated by vertical lines (|) and indicates the values of the timestamp and each channel.

  ```
  C000=Timestamp|Ch. 1|Ch. 2|Ch. 3|Ch. 4
  ```
- `Pxxx`: Past channel measurements

The server must reply to a data-in request with a process outcome in the following format:

```
<xml>
<root>
<ack>ok</ack>
</root>
</xml>
```

Order List

Data Logger

Type	Model No.	Compatible External Sensors
Temp, RH	RN400-H2PS	PR-P1-3, PR-P1-15, PR-K1-3, PR-K1-15
Temp, RH, Door	RN400-H2EX	PR-P1-3, PR-P1-15, PR-K1-3, PR-K1-15 AP-D1, AP-W1
Temp	RN400-T2PS	PR-N1-20, PR-N1-150, RG20
Temp, Door	RN400-T2EX	PR-P1-3, PR-P1-15, PR-K1-3, PR-K1-15 PR-T1-3, PR-T1-15, AP-D1, AP-W1
Temp	RN400-T2TS	PR-K1-3, PR-K1-15 PR-T1-3, PR-T1-15
4-20mA	RN400-T2CS	
Gas	RN400-T2GS	RG10-NH3, RG10-H2S
PM2.5 Particulate matter	RN400-T2PM	

Accessories

Temp Sensor

Type	Model No.	Cable
PT100	PR-P1-3	3 m
-200~200°C	PR-P1-15	15 m
Type K Thermocouple (TC-K)	PR-K1-3	3 m
-50~200°C	PR-K1-15	15 m
Type T Thermocouple (TC-T)	PR-T1-3	3 m
-200~200°C	PR-T1-15	15 m
NTC	PR-N1-20	20 cm
-100~200°C	PR-N1-150	150 cm
Temp & RH	RG20	

Gas Sensor

Type	Model No.	Cable
Ammonia	RG10-NH3	
Hydrogen Sulfide	RG10-H2S	

Misc.

Type	Model No.	Cable
Door Contact	AP-D1	1 m
Alarm beacon	AP-W1	25 cm
DC Adapter (EMC Core sold separately)	AP-P1	3 m

DEKIST
Embedded Web Service

ⓒ 2021 DEKIST Co., Ltd.

Telephone 1566-4359
Fax (+82) 31-8039-4400
Email master@dekist.com

#A1801, 13, Heungdeok 1-ro, Giheung-gu, Yongin-si, Gyeonggi-do, Korea 16954